ADVISORY PLANNING COMMISSION REPORT

To: Advisory Planning Commission Members — Date: July 15, 2020

From: Carla Eaton, Planner III — File No: Z 20-03

Subject: **Z 20-03, OCP and Zoning Amendment Bylaw No. 100.59 and 154.90 (1st and 2nd), 2971 Gorman Rd**

BACKGROUND

The applicant has applied to rezone the subject property from Rural Residential Small Parcel Zone (RU2) to Single Family Residential Zone (R1) and Low Density Multiple Residential Zone (R3); and to amend the Official Community Plan Land Use Designation on a portion of the property from Single Family Residential to Low Density Multiple Family (*Attachment 1 and 2*). The proposed amendment will facilitate approximately seventeen (17) single family residential lots and forty-four (44) townhouse units in the Glenrosa area (*Attachment 3 and 4*).

PROPERTY DETAILS			
Address	2971 Gorman Road		
PID	028-587-154		
Folio	36414601.015		
Lot Size	2.959 ha (7.314 ac)		
Owner	Kerr Properties 002 Ltd.	**Agent**	Travis Tournier
Current Zoning	Rural Residential Small Parcel Zone (RU2)	**Proposed Zoning**	Single Family Residential (R1) and Low Density Multiple Family (R3)
Current OCP	Single Family Residential	**Proposed OCP**	Low Density Multiple Family and Single Family Residential
Current Use	Vacant	**Proposed Use**	Residential
Development Permit Areas	Hillside and Sensitive Terrestrial Ecosystem		
Hazards	None Identified but natural drainage course noted		
Agricultural Land Reserve	N/A		

ADJACENT ZONING & LAND USES		
North	^	Single Family Residential (including some duplex use)
East	>	Neighbourhood Commercial and Single Family Residential (including some duplex use)

West	**<**	Single Family Residential and Country Residential
South	**v**	Glenrosa Middle School and Agricultural (in and out of ALR)

NEIGHBOURHOOD MAP

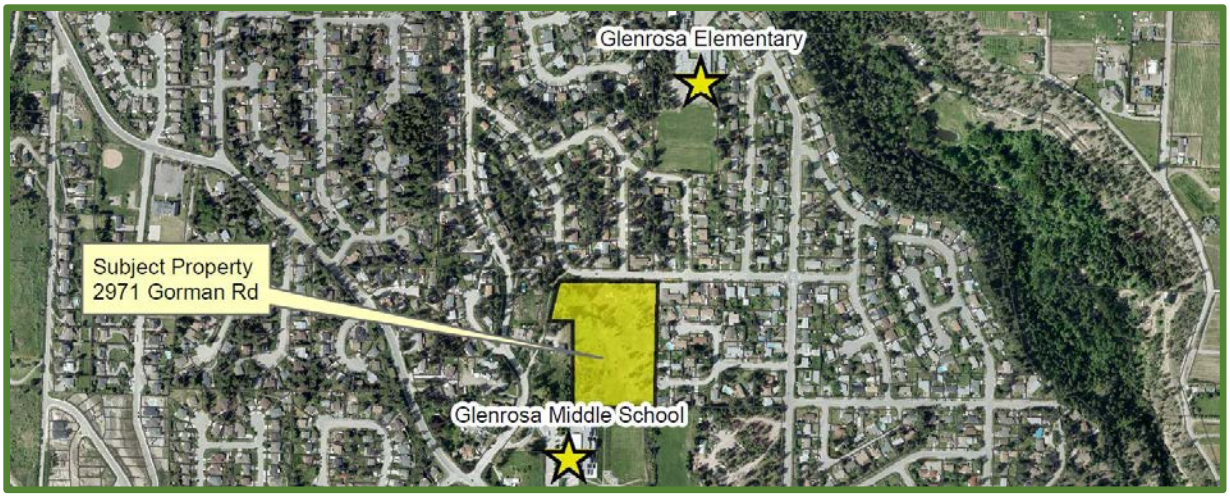

PROPERTY MAP

DISCUSSION

Applicant Rationale

As part of this application, the applicant submitted a development proposal summary in support of the proposed amendments (*Attachment 5),* as well as a preliminary subdivision layout for seventeen (17) single family lots and one (1) multifamily lot (see Figure 1 and *Attachment 6*). While the proposed subdivision layout and future townhouse development are subject to additional subdivision and development permit processes, the applicant has highlighted that the preliminary design and density for the R3 zone (44 units) is "substantially under the allowable density and site coverage in the R3 zone."

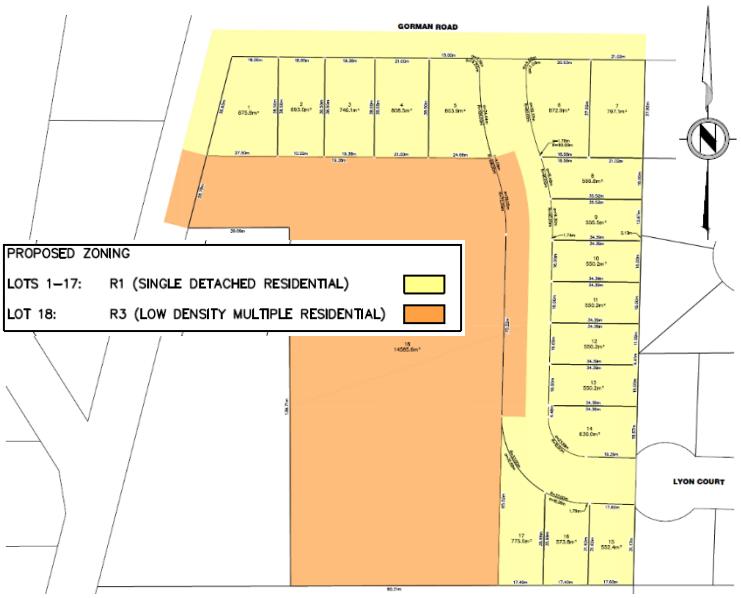

Figure 1: *Proposed Zoning & Preliminary Subdivision Layout*

Policy and Bylaw Review

Official Community Plan (OCP) Bylaw No. 0100

The subject property is located with the Single Family Residential land use designation, which supports traditional single family housing opportunities and encourages more land efficient compact housing forms for families. The proposed single family (R1) lots are consistent with this designation and will create a buffer between the proposed higher density townhouse development and the existing single family residential lots adjacent to the subject property.

The proposed amendment to Low Density Multiple Residential on the south-west portion of the property will accommodate the proposed townhouse development. The purpose of the designation to provide a broader range of housing opportunities in areas served by transit and in walking distance to community amenities, shops and services, while acknowledging the adjacent land use. The proposed use seems consistent with these objectives given that it is located within a transit service area, is immediately adjacent to the only neighbourhood commercial use, as well as being located less than five minutes walking distance to two schools. Additionally, the proposed ground oriented townhouses are consistent with Neighbourhood Growth Management designation policies that encourage infill housing where designed to respect and complement the type, scale and character of the neighbourhood.

Zoning Bylaw No. 0154

The subject property is currently Rural Residential Small Parcel (RU2) Zone, which is intended to accommodate rural, agricultural, and residential uses on parcels of land that are 1 ha or greater. The proposed Single Detached Residential (R1) Zone is intended to accommodate low density single detached residential use on parcels of land that are 550 m2 and larger (*Attachment 7*). The Low Density Multiple Residential (R3) Zone is intended to accommodate multiple residential in low density house form which includes duplex and townhouse forms (*Attachment 8*). All three zones only permit building heights up to 9 m with a maximum of three storeys, but do have some differences between parcel coverage and setbacks (see comparisons in Table 1 below).

Table 1. Zoning Regulations Comparison

Regulations	RU2 Zone	R3 Zone	R1 Zone
Parcel Area	1.0 ha	1000 m^2	550 m^2
Frontage	30.0 m	30.0 m	16.0 m
Parcel Coverage	10%	40%	40%
Building Height	9.0 m to a max of 3 storeys (20 m for barn)	9.0 m to a max of 3 storeys (5.0 m for accessory buildings)	9.0 m to a max of 3 storeys
Front Setback	6.0 m	4.5 m/ 6.0 m (garage)	4.5 m/ 6.0 m (garage)
Rear Setback	7.5 m	7.5 m	3.0 m
Interior Side Setback	4.5 m	3.0 m	1.5 m
Exterior Side Setback	4.5 m	4.5 m/ 6.0 m (garage)	4.5 m/ 6.0 m (garage)
Agricultural Setback	15.0m/ 9.0 w buffer	15.0m for the 1st two storeys/ 18.0m for the third storey	15.0m/ 9.0m w buffer

Development Permit Areas

The subject property is located within the Hillside and Sensitive Terrestrial Ecosystem Development Permit areas. Additionally, the proposed R3 townhouse development will also require a separate form and character Multiple Family Residential Development Permit to facilitate any future Building Permits.

Technical Review

Servicing

A Servicing Report[1] was submitted that notes that the site can be adequately serviced. Gorman Road will require frontage improvements and Lyon Court is proposed to be extended to Gorman Road[2] which will allow additional access/egress from the new development. Potential off-site sanitary sewer service upgrades may be required along

[1] Prepared by Aplin Martin, dated Jun 8, 2020

[2] Both Gorman Road and Lyon Court are to be constructed to a Rural Local Road standard, as per Works and Services Bylaw No. 0249, which is an 18 m right of way with ditches, street lighting, and optional paved pathway.

Gorman Road as per the Sanitary Sewer Master Plan[3] and additional information will be provided prior to public hearing. No additional off-site water servicing requirements are anticipated and stormwater management is expected to be addressed onsite. Final design at time of future development permit must also consider stormwater routing and private storage for the townhouse development. It is recommended that any identified off-site servicing works are required to be constructed at time of future development as a condition of the zoning amendment.

Geotechnical

A Geotechnical Review[4] was submitted that notes that "the site is suitable for the proposed residential development, and appears adequate and safe for the intended purpose." Site development has been concentrated in the flatter areas of the property and site cut and fill requirements have been kept to a minimum to preserve the natural topography of the site. The geotechnical engineer noted that control and redirection of the drainage course at the northwest corner of the property is anticipated at the time of the site development. The report makes additional future building recommendations regarding considerations for foundation design, groundwater and drainage, and pavement and trench backfilling. As a condition of the future development permit and subdivision process, it is likely that a geotechnical covenant will be registered on title to ensure the recommendations of the report are addressed during future construction.

Environmental

An Environmental Report[5] was submitted that notes "as long as the recommended mitigation measures are incorporated into the design and construction and the development footprint is limited to the areas proposed, the proposed development is not anticipated to have landscape-level effects on the habitat values within the project area." Recommended mitigation measures include limiting disturbance areas, restoring a vegetated swale designed to capture groundwater, installing bird and bat boxes as compensation for lost habitat, and ensuring that tree clearing either avoids bird nesting periods or includes a site survey for active nests and bird activity. These and other recommendations from the report will be considered with the future development permit prior to site disturbance.

Pedestrian Connection between Gorman Road and McIver Road

Based on desired pedestrian connections between Gorman Road and McIver Road[6] with access to Glenrosa Middle School, additional discussion is required with the applicant regarding the potential to construct a pedestrian connection along the entire length of McTaggart Road (see Figure 2 below). The portion of McTaggart Road that lies beyond the subject property (orange and blue dashed line) would be considered an off-site improvement and the portion of McTaggart Road that fronts the property (yellow dashed line) would be required in accordance with the Works and Services Bylaw No. 0120.

[3] Potentially upsize approximately 100m of sanitary main in Gorman Road between Malcolm and McNamara Road
[4] Prepared by Interior Testing Services Ltd, dated Apr 8, 2020
[5] Prepared by Ecoscape Environmental Consultants Ltd., dated May 2020
[6] Identified as a Future Multi-Use Trail (Figure 13), Pedestrian and Bicycle Infrastructure Plan, Jan 15, 2016

Previous residential rezoning application on the adjacent 3545 McIver Road property (Z 17-14) had recommended that the construction of a pedestrian trail[7] along the length of McTaggart Road be secured through the registration of a Section 219 covenant as a condition of the zoning amendment. However, the proposed amendments were never adopted.

Additional frontage improvements along the subject property fronting Gorman Road and the extension of Lyon Court include an optional paved pathway. However, final frontage requirements will be addressed at time of future subdivision.

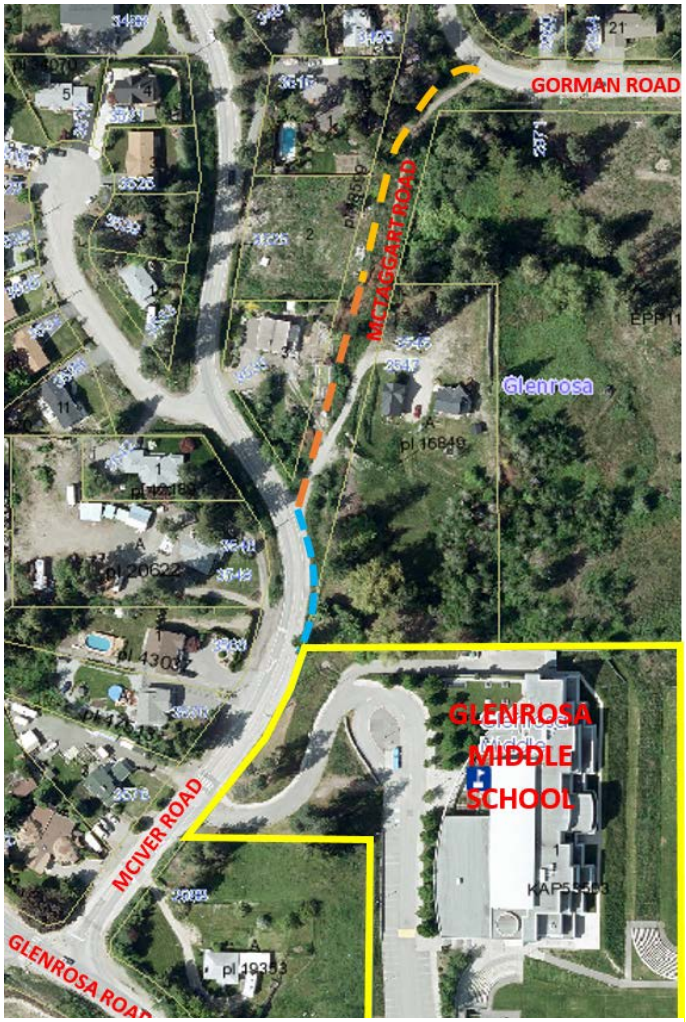

Figure 2: *Potential Pedestrian Connections*

Referral Responses

A referral for the application was circulated to all departments and key agencies and comments are open until July 17, 2020. Based on comments received thus far, no objections were noted, but general comments were received noting that the property has a history of complaints for unsightly weeds although these were remedied by the owners once notified of the complaint.

Agricultural Advisory Committee (AAC)

Should the proposed amendments receive first and second reading, the AAC is anticipated to consider the application on August 6, 2020.

Public Notification

A notice of application sign has been placed on the subject property in accordance with the Development Application Procedures Bylaw No. 0260.

KEY CONSIDERATIONS

In providing recommendations to City staff and Council, the APC may wish to consider the following:

[7] Narrow multi-use trail with asphalt finish (2 m width) along McTaggart Road from the subject property to Gorman Road, including lighting and drainage

- Residential policies encourage the sensitive integration of different housing forms in all residential growth areas in support of neighbourhood diversity and healthy communities.
- Infill development makes more efficient use of community services and reduces development pressures at the urban fringes.
- The proposed higher density residential use has an appropriate transition to existing single family residential uses and is similar in form in respect of ground oriented 3 storey buildings.
- The future development permit process will address hillside and environmental mitigation, as well as form and character issues with the proposed townhouse development.
- There are opportunities to provide additional trail connections through the new development area and along the adjacent McTaggart Road providing improved pedestrian connectivity to Glenrosa Middle School that require additional discussion.

Specific comments would be appreciated should the APC have any concerns with the proposed land uses, so that they may be further investigated or considered prior to staff providing a recommendation to Council as part of consideration of the application.

Respectfully submitted,

Carla Eaton

Carla Eaton
Planner III

Powerpoint: Yes ☒ No ☐

Attachments:

1. Official Community Plan Amendment Bylaw No. 0100.59, 2020
2. Zoning Amendment Bylaw No. 0154.90, 2020
3. Context Property Map
4. Subject Property Map
5. Applicant Proposal Summary
6. Conceptual Subdivision Plan
7. Single Detached Residential (R1) Zone
8. Low Density Multiple Residential (R3) Zone

CITY OF WEST KELOWNA

BYLAW NO. 0100.59

A BYLAW TO AMEND "OFFICIAL COMMUNITY PLAN BYLAW NO. 0100"

WHEREAS the Council of the City of West Kelowna desires to amend "CITY OF WEST KELOWNA OFFICIAL COMMUNITY PLAN BYLAW NO. 0100" under the provisions of the *Local Government Act*.

THEREFORE BE IT RESOLVED that the Council of the City of West Kelowna, in open meeting assembled, hereby enacts as follows:

1. Title

   This Bylaw may be cited as "CITY OF WEST KELOWNA OFFICIAL COMMUNITY PLAN AMENDMENT BYLAW NO. 0100.59, 2020".

2. Amendments

   "City of West Kelowna Official Community Plan Bylaw No. 0100" is hereby amended as follows:

   2.1 By changing the designation on a portion of Lot A, District Lot 3189, ODYD, Plan EPP11876, as shown on Schedule 'A' attached to and forming part of this bylaw, from Single Family Residential to Low Density Multiple Family.

   2.2 By depicting the change on "City of West Kelowna Official Community Plan Bylaw No. 0100 Schedule B" (Land Use map).

READ A FIRST AND SECOND TIME THIS
PUBLIC HEARING HELD THIS
READ A THIRD TIME THIS
ADOPTED THIS

MAYOR

CITY CLERK

CITY OF WEST KELOWNA

SCHEDULE 'A' of BYLAW NO. 0100.59

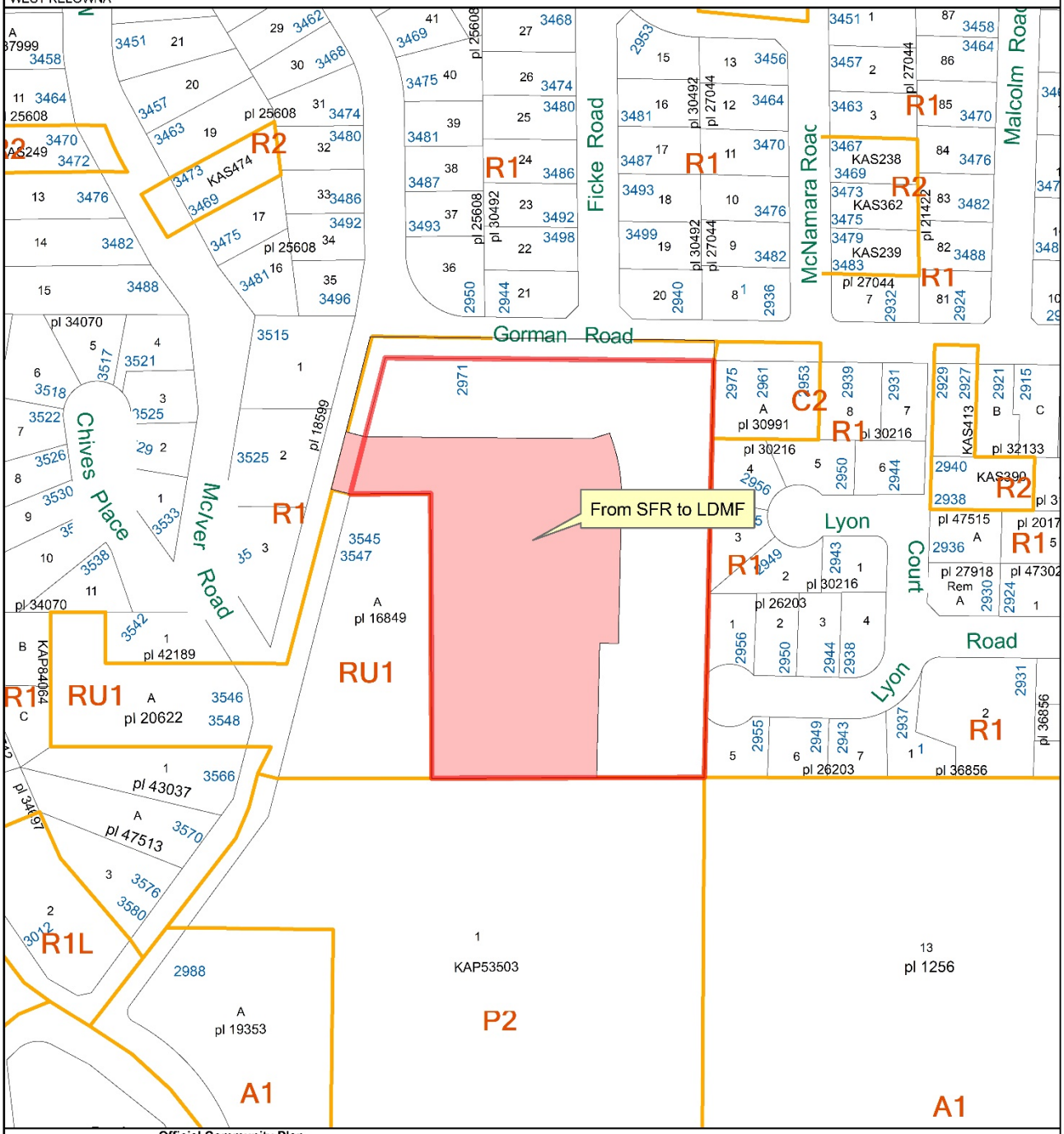

LEGEND

Official Community Plan

ZONE, ToZone

- SFR to SFR
- SFR to LDMF
- Zoning Boundary
- Parcels
- Subject Property

0 37.5 75 150 Metres

1:2,500

N W E S

Date: 2020-07-07

CITY OF WEST KELOWNA

BYLAW NO. 0154.90

A BYLAW TO AMEND "ZONING BYLAW NO. 0154"

WHEREAS the Council of the City of West Kelowna desires to amend "CITY OF WEST KELOWNA ZONING BYLAW NO. 0154" under the provisions of the *Local Government Act*.

THEREFORE BE IT RESOLVED that the Council of the City of West Kelowna, in open meeting assembled, hereby enacts as follows:

1. Title

This Bylaw may be cited as "CITY OF WEST KELOWNA ZONING AMENDMENT BYLAW NO. 0154.90, 2020".

2. Amendments

"Zoning Bylaw No. 0154" is hereby amended as follows:

2.1 By changing the zoning on Lot A, District Lot 3189, ODYD, Plan EPP11876, as shown on Schedule 'A' attached to and forming part of this bylaw, from Rural Residential Small Parcel Zone (RU2) to Single Family Residential Zone (R1) and Low Density Multiple Residential Zone (R3).

2.2 By depicting the change on "Zoning Bylaw No. 0154 Schedule B" (Zoning Bylaw map).

READ A FIRST AND SECOND TIME THIS
PUBLIC HEARING HELD THIS
READ A THIRD TIME THIS
ADOPTED THIS

M A Y O R

CITY CLERK

CITY OF WEST KELOWNA

SCHEDULE 'A' of BYLAW NO. 0154.90

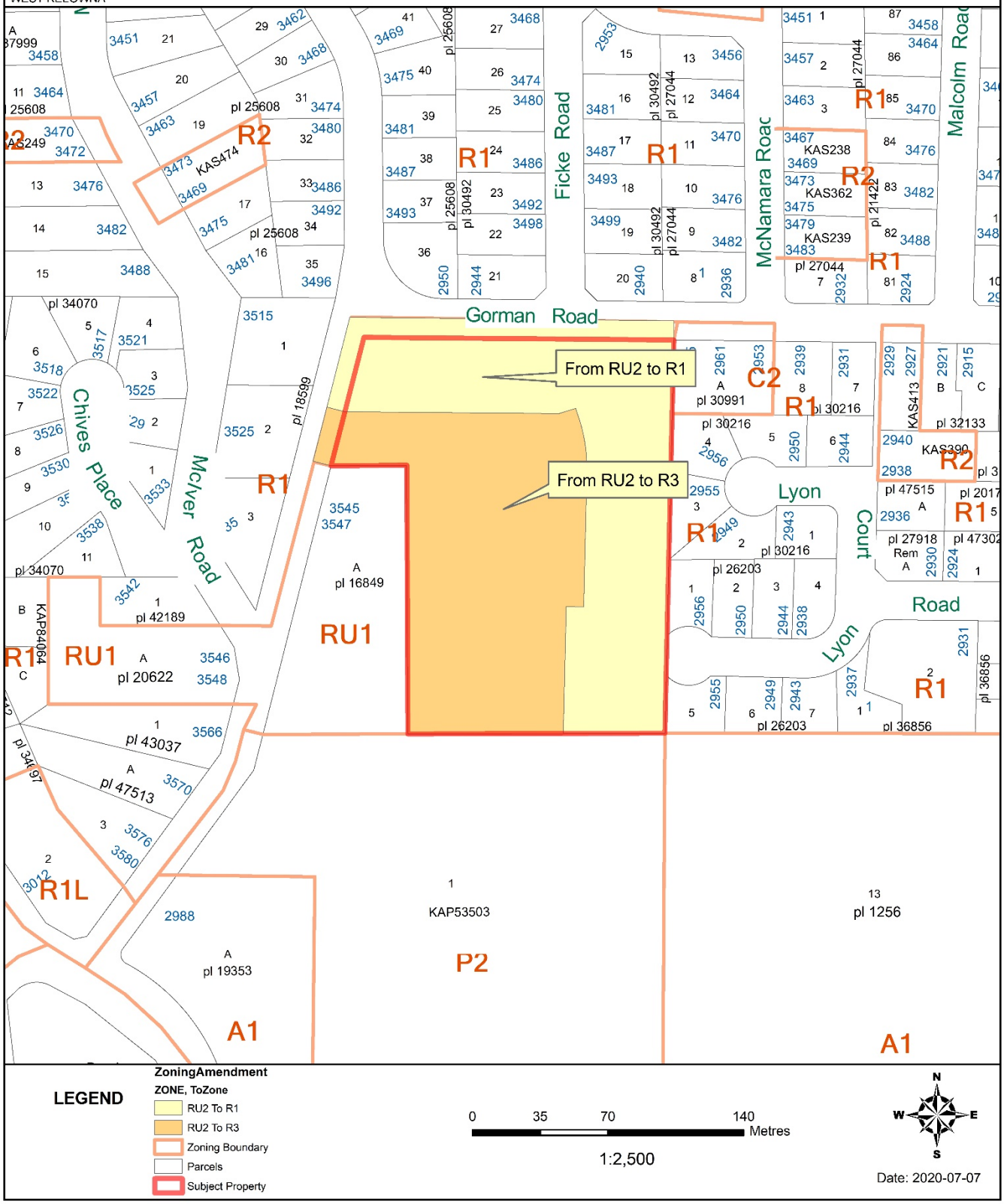

CITY OF WEST KELOWNA

CONTEXT MAP: Z 20-03

File: Z 20-03

Legal Description: Lot A, DL 3189, ODYD, Plan EPP11876

Subject Property

City Boundary

0 150 300 600 Metres

1:10,000

N W E S

Path: H:\DEVELOPMENT SERVICES\PLANNING\3360 Zoning & Rezoning\20 Applications\2020\Z 20-03 2971 Gorman Rd\Maps\Context Map.mxd

Date: 2020-06-12

CITY OF WEST KELOWNA

SUBJECT PROPERTY: Z 20-03

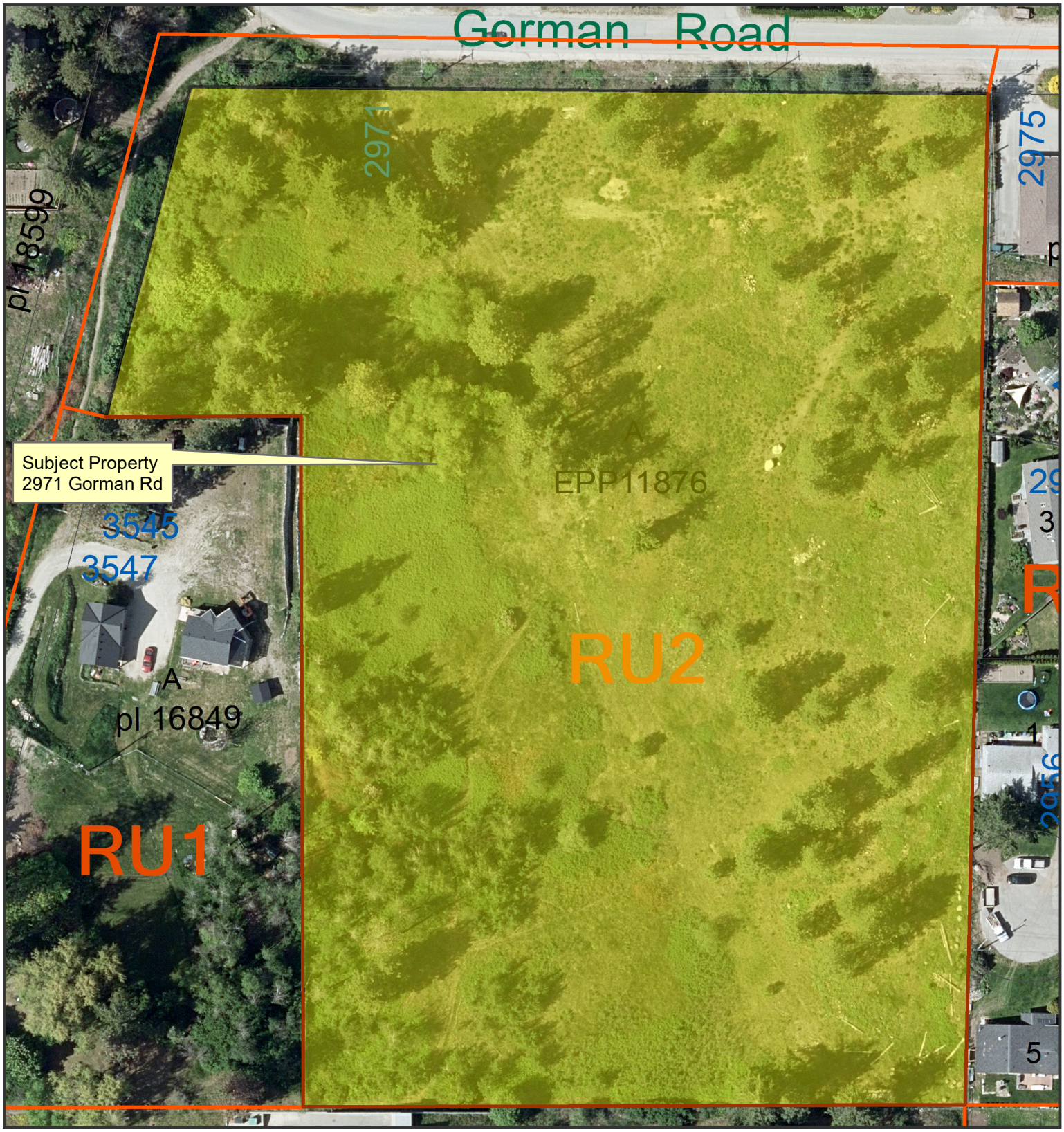

LEGEND

- Subject Property
- Zoning Boundary
- Parcels

File: Z 20-03

Legal Description: Lot A, DL 3189, ODYD, Plan EPP11876

0 15 30 60 Metres

1:1,049

N W E S

Path: H:\DEVELOPMENT SERVICES\PLANNING\3360 Zoning & Rezoning\20 Applications\2020\Z 20-03 2971 Gorman Rd\Maps\Subject Property.mxd

Date: 2020-06-12

Development Proposal Summary

Kerr Properties purchased 2971 Gorman Rd with the vision of developing a unique mix of single-family residential homes on sizeable lots and low density multi family townhomes having all the conveniences of a single-family home in a more affordable price range. All located in a spectacular natural setting with rolling hillsides and a convenient location promoting a family oriented and active Okanagan lifestyle.

We view this large seven-acre site as a rare opportunity to offer a diverse range of homes while maintaining the appeal of the surrounding single-family neighbourhood. Kerr Properties worked with our designers at Aplin Martin to envision a site plan that would maintain the privacy of our neighbours by buffering the surrounding single-family properties with new single-family homes.

The topography of the site lends itself beautifully in creating a natural buffer between the proposed townhomes and the one single family property to the west and also limits any site line obstructions with the roof tops of the townhomes being below the grades of the property to the west. The single-family homes within this development are located on the opposite side of the roadway also providing a buffer between single family and multi family homes.

The road extension from Lyon Court through to Gorman Rd offers multiple ingress and egress points to the site allowing resident and neighbourhood traffic to flow with ease. Traffic impacts have been studied and are considered minor as noted by Aplin Martin in the attached functional servicing report.

The development will be serviced with full city services, including an 18-meter right of way for city roads, city sanitary sewer and water, and onsite storm infiltration. Aplin Martin has determined in their preliminary assessment that servicing of the site is achievable with current city infrastructure in the area and some minor upgrades to meet development demands.

Kerr Properties views this site as a very exciting opportunity to add some diverse housing options in the Glenrosa neighbourhood with low density multi family townhomes in an appropriate area with close proximity to schools all while maintaining and even enhancing the character and liveability of the existing neighbourhood.

Proposed are three storey, three bedroom, and three-bathroom townhomes in the southwest section of the property; these townhomes would fall under the R3 zoning, however, the density proposed is substantially under the allowable density and site coverage in the R3 zone.

Kerr Properties Ltd
26138 31 B Avenue, BC, V4W 2Z6
Tel (604) 856-9772 Fax (604) 856-2325
www.kerrproperties.ca

Finally, we have envisioned these townhomes as a alternative lifestyle and more affordable version of a single-family home with all the individual amenities of full driveways, double garages, private patios, and decks but also first class common amenity spaces with playgrounds, pickle ball courts and even a dog park. The townhome site flows nicely with walking trails throughout providing interconnectivity between common amenity spaces while keeping pedestrian and vehicle traffic separate.

Key Development Features	**Yes**	**No**
LOW R3 density with only 44 townhome unit proposed on 3.6 acres – R3 Zoning allows for 78 units on the 3.6 areas	✓	
LOW density with only 0.55 FAR out of the allowable 0.75 under the R3 zone	✓	
LOW parcel coverage with only 18% out of the allowable 40% under the R3 zone	✓	
Large seven-acre parcel offering diverse housing options	✓	
Affordable mix of single family and multi family homes	✓	
Diverse housing options suitable for all lifestyles	✓	
Strategic buffering of surrounding residents	✓	
Full city standard roads	✓	
Full city services	✓	
Townhomes with full driveway queuing and double garages	✓	
Townhomes with private patios, decks and yards	✓	
First class common amenity spaces	✓	
Proximity to schools	✓	
Retention of Natural hillsides	✓	
Improved city infrastructure		X
Need for retaining walls		X
Negative Traffic Impacts		X
Negative Environmental Impacts		X
Negative neighbourhood impacts		X

Travis Tournier, Development Manager

Kerr Properties Ltd
26138 31 B Avenue, BC, V4W 2Z6
Tel (604) 856-9772 Fax (604) 856-2325
www.kerrproperties.ca

PROPOSED ZONING

LOTS 1–17: R1 (SINGLE DETACHED RESIDENTIAL)

LOT 18: R3 (LOW DENSITY MULTIPLE RESIDENTIAL)

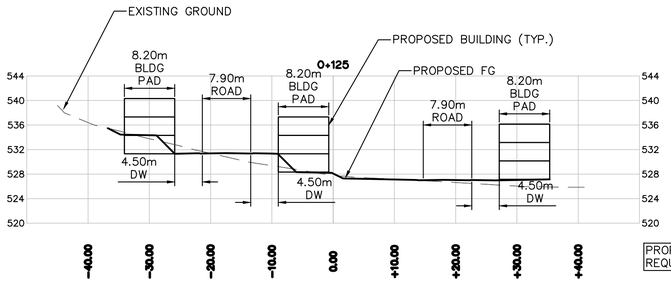

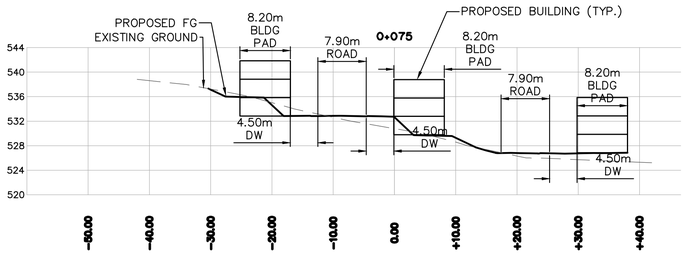

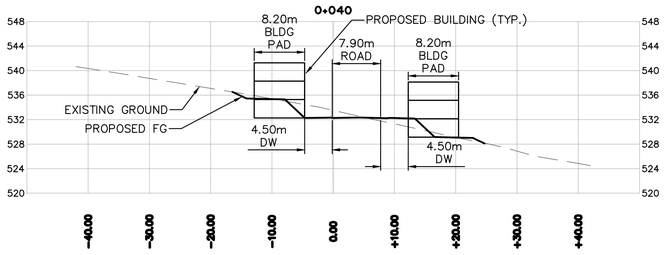

NOTICE TO CONTRACTOR

IT IS THE RESPONSIBILITY OF THE CONTRACTOR'S SURVEYOR TO VERIFY THAT ALL LEGAL SURVEY DIMENSIONS SHOWN ON THE ENGINEERS DRAWINGS AGREE WITH THOSE ON THE REGISTERED LEGAL SURVEY PLAN. SHOULD THERE BE ANY DISCREPANCIES, THEN IMMEDIATELY NOTIFY THE ENGINEER OF RECORD

LEGAL DESCRIPTION: .
.

B.M. MONUMENT NO. . ELEVATION: .
LOCATED AT . STREET & . AVENUE

REV. NO.	DESCRIPTION	DR	CH	DATE	APP

APLIN MARTIN
ENGINEERING ARCHITECTURE PLANNING SURVEYING

Aplin & Martin Consultants Ltd.
454 Leon Avenue, Kelowna, B.C. Canada V1Y 6J3
Tel: (250) 448-0157, Fax: (778) 436-2312, Email: general@aplinmartin.com

CLIENT:
PATRICK KERR
KING HOE EXCAVATING LTD.
PH. 604-856-9772

PROJECT:
GORMAN ROAD SUBDIVISION
2971 GORMAN ROAD, WEST KELOWNA BC

The location of existing underground utilities are shown in an approximate way only & have not been independently verified by the owner or its representative. The contractor shall determine the exact location of all existing utilities before commencing work, and agrees to be fully responsible for any and all damages which might be occasioned by the contractor's failure to exactly locate and preserve any and all underground utilities.

TITLE:
SITE PLAN A
42 MULTI-FAMILY UNITS

DESIGN: JRG CHECK: BR
DRAWN: JRG APPR: BR

A & M FILE: **18-3026**

PROJECT NO. .

SCALE : HORZ. 1:500 VERT. 1:500

DRAWING DATE: **FEBRUARY, 2020**

DRAWING NO. .

A & M DRAWING NO. **18-3026- SK1**

SHEET NO.

REV.

0 5 1:500 25m

Feb 24 2020 - 4:27pm M:\2018\18-3026\DWG\PROD\18-3026-SK1-SITE_LAYOUT.dwg\SK1 admin

NOTICE TO IT IS THE RESPONSIBILITY OF THE CONTRACTOR'S SURVEYOR TO VERIFY THAT ALL LEGAL SURVEY DIMENSIONS SHOWN ON THE ENGINEERS DRAWINGS AGREE WITH THOSE ON THE REGISTERED LEGAL SURVEY PLAN. SHOULD THERE BE ANY DISCREPANCIES, THEN IMMEDIATELY NOTIFY THE ENGINEER OF RECORD.

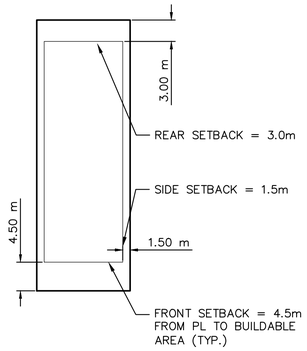

R1 – SINGLE DETACHED RESIDENTIAL ZONE TYPICAL LOT SETBACKS
NTS

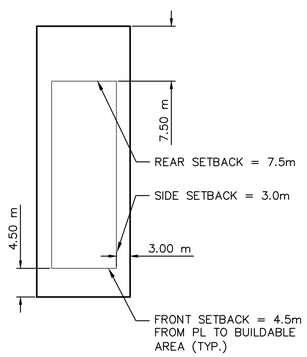

R3 – LOW DENSITY MULTIPLE RESIDENTIAL ZONE TYPICAL LOT SETBACKS
NTS

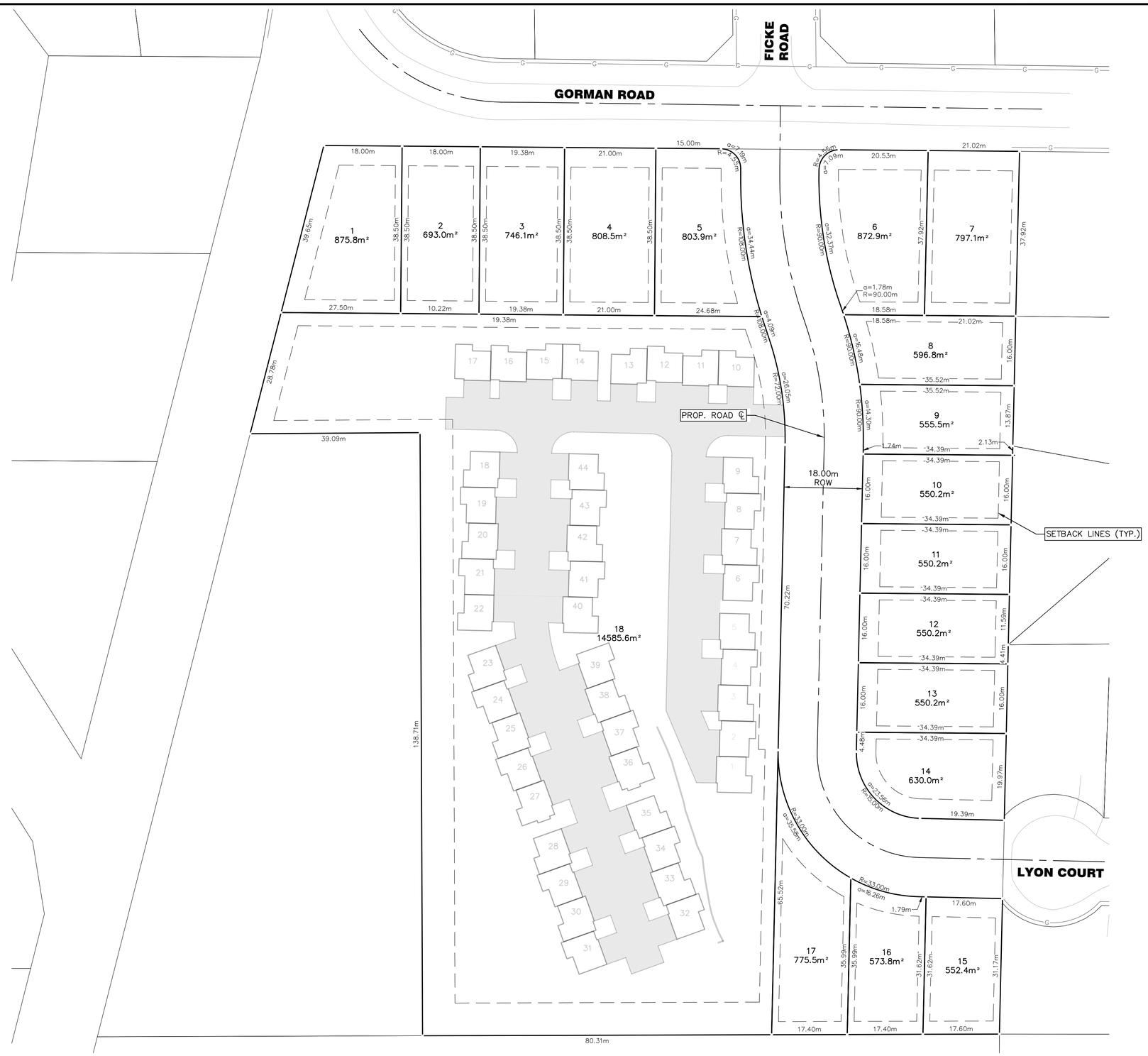

NOT FOR CONSTRUCTION

LEGAL DESCRIPTION: .
.
B.M. MONUMENT NO. . ELEVATION: .
LOCATED AT . STREET & . AVENUE

REV. NO.	DESCRIPTION	DR	CH	DATE	APP
0	ISSUED FOR REZONING/OCP AMENDMENT	RB	JRG	20/06/08	JDB

APLIN MARTIN
ENGINEERING ARCHITECTURE PLANNING SURVEYING
Aplin & Martin Consultants Ltd.
1258 Ellis Street, Kelowna, B.C. Canada V1Y 1Z4
Tel: (250) 448-0157, Fax: (778) 436-2312, Email: general@aplinmartin.com

CLIENT:
KERR PROPERTIES 002 LTD.
26138 31b AVE, ALDERGROVE BC
PH. 604-533-3231

PROJECT:
GORMAN ROAD SUBDIVISION
2971 GORMAN ROAD, WEST KELOWNA BC

The location of existing underground utilities are shown in an approximate way only & have not been independently verified by the owner or its representative. The contractor shall determine the exact location of all existing utilities before commencing work, and agrees to be fully responsible for any and all damages which might be occasioned by the contractor's failure to exactly locate and preserve any and all underground utilities.

TITLE:
SUBDIVISION LAYOUT PLAN

DESIGN: RB CHECK: JRG
DRAWN: RB APPR: JDB
A & M FILE: **18-3026**
PROJECT NO. .
SCALE : HORZ. 1:500 VERT. 1:500
DRAWING DATE: **JUNE, 2020**
DRAWING NO. .
A & M DRAWING NO. **18-3026-031**
SHEET NO. **2 OF 4**
REV.

0 5 1:500 25m

Apr 06 2020 – 10:41am M:\2018\18-3026\DWG\ONSITE PRODUCTION\18-3026-031-SITE PLAN.dwg/031 Ridoven

10.4. SINGLE DETACHED RESIDENTIAL ZONE (R1)

Bylaw No. 154.36

.1 Purpose

To accommodate low density single detached residential use on parcels of land that are 550 m^2 and larger.

.2 Principal Uses, Buildings and Structures

(a) Single detached dwelling

.3 Secondary Uses, Buildings and Structures

(a) Accessory uses, buildings and structures
(b) Bed and breakfast
(c) Care facility, minor
(d) Carriage house
(e) Home based business, major
(f) Secondary suite

.4 Site Specific Uses, Buildings and Structures

(a) On Lot 1, Plan 44004, DL 581 ODYD, Except Plans KAP48178 & KAP53981: vineyard and one single detached/caretakers residence.

.5 Regulations Table

SUBDIVISION REGULATIONS		
(a)	**Minimum parcel area**	550 m^2 (5,920.2 ft^2)
(b)	**Minimum usable parcel area**	330 m^2 (3,552.1 ft^2)
(c)	**Minimum parcel frontage**	16.0 m (52.5 ft)
DEVELOPMENT REGULATIONS		
(d)	**Maximum density:**	
.1	Single detached dwelling	1 per parcel
.2	Secondary suite and carriage house	Only 1 secondary suite or only 1 carriage house per parcel
(e)	**Maximum parcel coverage**	40%
(f)	**Maximum building height:**	
.1	Single detached dwelling	9.0 m (29.5 ft) to a maximum of 3 storeys
.2	Accessory buildings and structures	5.0 m (16.4 ft)
.3	Carriage house	5.0 m (16.4 ft) to a maximum of 1 storey or 6.5 m (21.3 ft) to a maximum of 1.5 storeys where at least one parking stall is provided in the same building

SITING REGULATIONS		
(g)	**Buildings and structures shall be sited at least the distance from the feature indicated in the middle column below, that is indicated in the right-hand column opposite that feature:**	
.1	Front parcel boundary or private access easement, whichever is closer	4.5 m (14.8 ft) except it is 6.0 m (19.7 ft) for a garage or carport having vehicular entry from the front
.2	Rear parcel boundary or private access easement, whichever is closer	3.0 m (9.8 ft)
.3	Interior side parcel boundary	1.5 m (4.9 ft)
.4	Exterior side parcel boundary or private access easement, whichever is closer	4.5 m (14.8 ft) except it is 6.0 m (19.7 ft) for a garage or carport having vehicular entry from the exterior side
.5	A1 Zone or ALR	15.0 m (49.2 ft) except it is 9.0 (24.6ft) if a level 1 buffer is provided.

.6 Other Regulations

(a) Without limiting the application of the height regulation in Section 10.4.5(f).1, the height of any single building wall, measured from the lowest elevation of grade at the foot of the wall to the lower surface of the eave, or to the top of the wall in the case of a building without eaves, shall not exceed the lesser of 3 storeys or 9 m (29.5 ft).

(b) Without limiting the application of the height regulation in Section 10.4.5(f).3, the height of any carriage house wall, measured from the lowest elevation of grade at the foot of the wall to the lower surface of the eave, or to the top of the wall in the case of a building without eaves, shall not exceed the lesser of 1.5 storeys and 6.5 m (21.3 ft).

(c) Despite Section 10.4.5(c), the parcel frontage may be less than 16.0 m (52.5 ft) for parcels on a cul-de-sac provided that the radius of the curvature along the parcel frontage is less than 160 m (524.9 ft) and the arc length along the parcel boundary is at least 12.0 m (39.4 ft) as illustrated in Figure 10.1.

Figure 10.1 Minimum frontage on a cul-de-sac

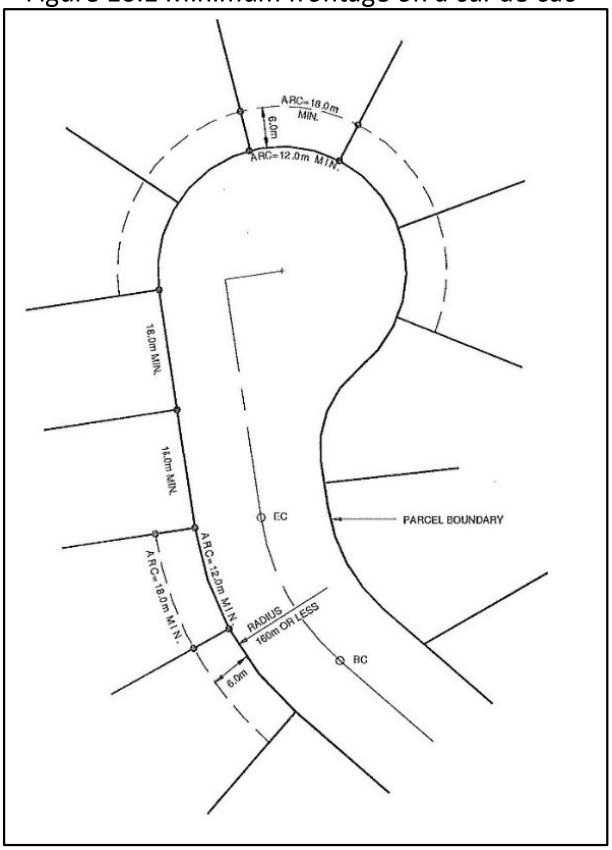

.7 Siting Regulations for Approving Subdivisions

(a) The regulations requiring a minimum distance between garages or carports having vehicular entry from parcel boundaries or private access easements, that is greater than the minimum distance required for other buildings and structures, and

(b) The regulations requiring that the siting of a building or structure be determined in relation to the location of a private access easement, if it is closer to the building or structure than the relevant parcel boundary,

shall not apply to any parcel created by subdivision deposited in the Land Title Office before March 13, 2014 provided that the building permit authorizing the construction of the building or structure is issued before March 13, 2019.

10.9.LOW DENSITY MULTIPLE RESIDENTIAL ZONE (R3)

.1 Purpose

To accommodate multiple residential in low density housing form.

.2 Principal Uses, Buildings and Structures

(a) Care facility, major, in duplex or townhouse form only
(b) Duplex
(c) Group home, in duplex or townhouse form only
(d) Townhouse

.3 Secondary Uses, Buildings and Structures

(a) Accessory uses, buildings and structures
(b) Home based business, minor

.4 **Site Specific Uses, Buildings and Structures**

Bylaw No. 154.11 (a) On Lots 1-16, District Lot 2045, ODYD, Strata Plan KAS1884: single detached dwellings

Bylaw No. 154.11 (b) On Lots 1-73, District Lot 5070, ODYD, Strata Plan KAS2583: single detached dwellings and apartments.

Bylaw No. 154.11 (c) Apartments on:
(i) Lot A, District Lot 2602, ODYD, Plan KAP92694;
(ii) Lot 41, District Lot 703, ODYD, Plan KAP88313;
(iii) District Lot 2602, ODYD, Plan KAP83141, Except Strata Plan KAS3683, and District Lot 2602, ODYD, Strata Plan KAS3683;
(iv) Lots 1-14, District Lot 2602, ODYD, Plan KAS3023;
(v) Lots 1-142, District Lot 2601, ODYD, Strata Plan KAS3485;
(vi) Lot 1, District Lot 434 and District Lot 2045, ODYD, Plan 36364; and
(vii) the R3-zoned portion of Lot C, District Lot 2045, ODYD, Plan KAP60462; and
Bylaw No. 154.22 (viii) Lot A, DL 2602, ODYD, Plan KAP80333

.5 Regulations Table

SUBDIVISION REGULATIONS		
(a)	**Minimum parcel area**	1000 m^2 (10,763.9 ft^2)
(b)	**Minimum usable parcel area**	700 m^2 (7,534.7 ft^2)
(c)	**Minimum parcel frontage**	30.0 m (98.4 ft)
DEVELOPMENT REGULATIONS		
(d)	**Maximum density**	0.75 FAR
(e)	**Maximum parcel coverage**	40%
(f)	**Maximum building height:**	9.0 m (29.5 ft) to a maximum of 3 storeys except it is 5.0 m (16.4 ft)for accessory buildings and structures

SITING REGULATIONS		
(g)	**Buildings and structures shall be sited at least the distance from the feature indicated in the middle column below, that is indicated in the right-hand column opposite that feature:**	
.1	Front parcel boundary	4.5 m (14.8 ft) except it is 6.0 m (19.7 ft) for a garage or carport having vehicular entry from the front
.2	Rear parcel boundary	7.5 m (24.6 ft)
.3	Interior side parcel boundary	3.0 m (9.8 ft)
.4	Exterior side parcel boundary	4.5 m (14.8 ft) except it is 6.0 m (19.7 ft) for a garage or carport having vehicular entry from the exterior side
.5	A1 Zone or ALR	15.0 m (49.2 ft) for the first two storeys or portion of the building less than or equal to 6.0 m (19.7 ft) in height, whichever is less
		18.0 m (59.1 ft) for the third storey or portion of the building above 6.0 m (19.7 ft) but less than or equal to 9 m (29.5 ft) in height, whichever is less
OUTDOOR AMENITY SPACE		
(h)	**Minimum outdoor amenity space per unit**	25 m^2 (269.1 ft^2)

.6 Other Regulations

(a) Where side-by-side duplex units or townhouses are subdivided under the *Land Title Act*, Sections 10.9.5(a), 10.9.5(b) and 10.8.9(c) shall not apply provided that each parcel so created contains not less than one half the minimum parcel area, not less than one half the minimum usable site area and not less than one half the minimum frontage specified in those Sections, and Section 10.9.5(g).3 shall not apply.

(b) **Siting Regulations for Approved Subdivisions**

Bylaw No. 154.06

.1 the regulations requiring a minimum distance between garages or carports having vehicular entry from parcel boundaries or private access easements, that is greater than the minimum distance required for other buildings and structures,

shall not apply to any parcel created by subdivision deposited in the Land Title Office before March 13, 2014 provided that the building permit authorizing the construction of the building or structure is issued before March 13, 2019.